DOFINE

Http://www.zj-df.com.cn

东方传动机械

DONGFANG DRIVING MACHINE

DXG系列悬挂式减速机

DXG SERIES SHAFT MOUNTED GEARBOX

- ISO9001国际质量体系认证
- 中国减变速机行业协会会员单位
- International quality system certificate
- The member of variator guild in china

2014



浙江东方传动机械有限公司

ZHEJIANG DONGFANG DRIVING MACHINE CO.,LTD.

地址/Add：温州永嘉乌牛东蒙工业区

Dongmeng Industrial Zone.Wuniu.Yongjia.Wenzhou.China

电话/Tel：0577-67306800 67306801 67306802

传真/Fax：0577-67394111

邮编/P.C.：325103

E-mail：zjdfcd@163.com

Http：//www.zj-df.com

About us

关于我们






浙江东方传动机械有限公司是中国通用机械减变速机行业协会单位，是从事减变速机专业制造公司，公司在国内同行业率先实行并通过 ISO9001 国际质量体系认证，完善的质量体系和严格的管理，使产品质量得到完美保证，深受广大用户的信赖，历年被评为明星企业。公司自一九九一年创立以来，先后引进先进技术和高精密的设备，使产品质量不断提高，主导产品为斜齿轮硬齿面减速机，螺旋锥齿轮减速机，铝合金微型摆线减速机，机械无级变速机，蜗轮减速机及行星齿轮减速机等。公司检测设备齐全，齿轮材料采用优质合金钢经渗碳淬火、磨齿制成、精度达GB/T10095标准5~6级，保证了产品的高强度、低噪音、经久耐用。公司宗旨“质量第一，信誉至上”，本公司愿和国内外朋友精诚合作，共同发展。

Zhejiang Dongfang Driving Machine Co., Ltd., a member of Chinese Reducer & Variator Association, is a professional ma–nufacturer of reducer and variator. Our company took the lead in passing and implementing ISO9001 International Quality Management System in our industry of China. Thanks to our perfect quality system and strict management, our product quality can be assured completely and has won deep trust in users. We've been awarded Star Enterprises over years. Since established in 1991, our company has successfally imported advanced technology and high–precision equipment so that our product quality has been improved continually. Our main products include: helical gear reducer with hard gear surface, helical bevel taper gear reducer, aluminum alloy mini cycloidal reducer, mechanical stepless variator, worm gear reducer, planetary gear reducer and so on. With complete testing equipment, our gear adopts the high–quality alloy steel going through the treatment of carburization, tempering and grinding with a precision up to levels 5–6 of GB/T10095, thus ensuring that our products are high–strength, low–noise, lasting and durable.Upholding the philosophy of "quality and credit first", we'd like to carry out sincerely cooperation with friends both at and abroad for common development.

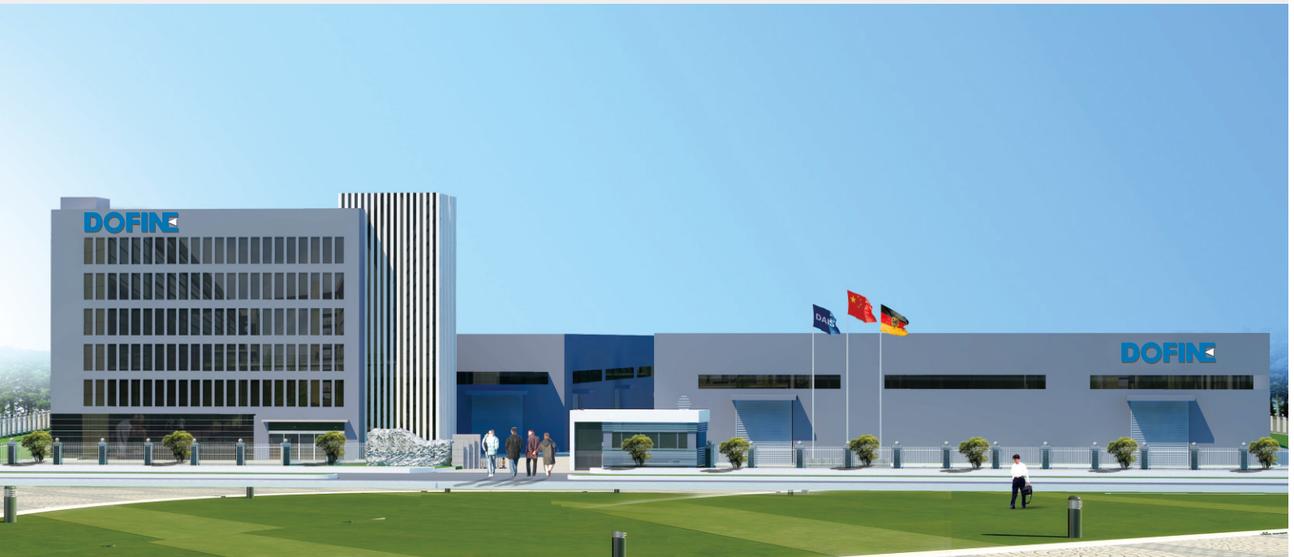

目录CONTENTS

一、设计特点DESIGN CHARACTERISTICS ---------- 01
二、扭矩 TORQUE ---------- 02
三、转速 SPEED ---------- 02
四、功率 POWER ---------- 03
五、使用系数 SERVICE FACTOR ---------- 03
六、选型 SELECTION ---------- 04
七、安装 INSTALLATION ---------- 04
八、核查 VERIFCATION ---------- 05
九、维护 MAIN TENANCE ---------- 06
十、油漆规格 PAINT SPECI FICATIONS ---------- 06
十一、供货条件 CONDITIONS OF SUPPLY ---------- 06
十二、储存 STORAGE ---------- 06
十三、型号标识说明 MODEL IDENTIFICATION DESCRIPTION ---------- 07
十四、润滑 LUBRICATION ---------- 08
十五、安装方位 MOUNTING POSITIONS ---------- 09
十六、悬挂负载 OVERHUNG LOADS ---------- 10
十七、 减速机选型表 RATING CHARTS ---------- 10
十八、 外形尺寸 DIMENSIONS ---------- 12
十九、 附件 ACCESSOIRES ---------- 22





一、设计特点DESIGN CHARACTERISTICS

主要的设计特点如下：
1）、全部采用低碳合金钢渗碳处理
2）、齿轮及齿轮轴精度高
3）、体积小、扭矩大

The characteristics are as follows:
1）、Uses low-carbon alloyed steel cementation processing completely
2）、The gear and the gear shaft precision is high
3）、The volume small,the torque is big

(A1)

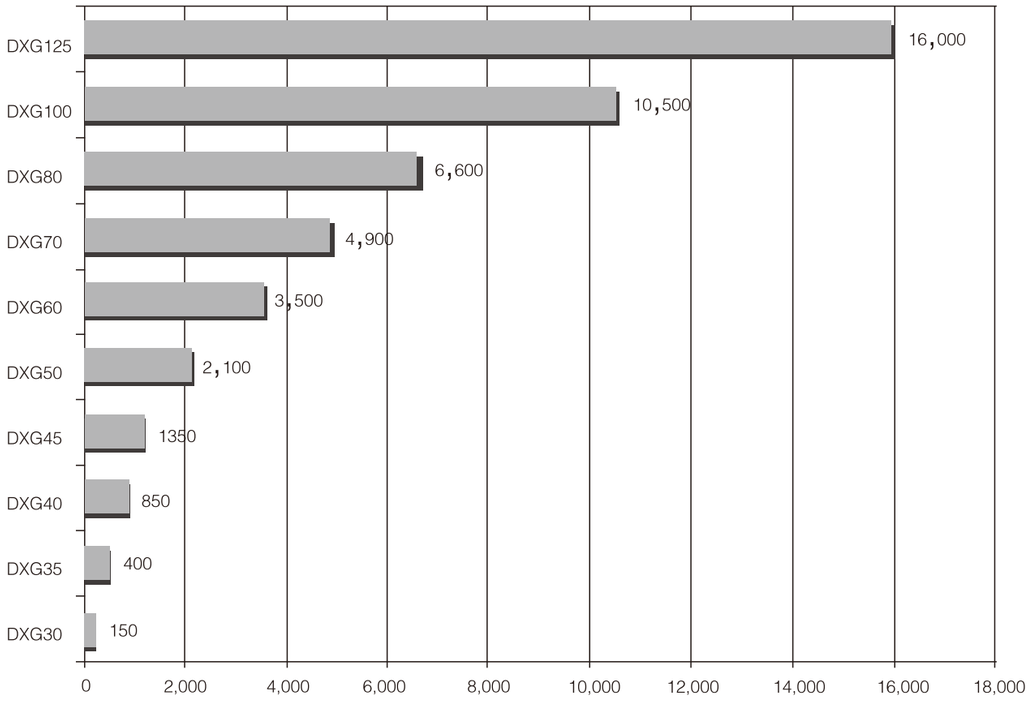

Mn_2 [Nm] (n_1=900r/min)

二、扭矩 TORQUE

许用扭矩

M_{n2} [Nm]

齿轮箱在使用系数fs=1的情况，通过输出轴所传递的扭矩，许用扭矩与转速有关下

Rated torque

M_{n2} [Nm]

Rated torque is the one through the output shaft, and also relate to the speed. It is used under the situation os service factor fs=1

工作扭矩

M_{r2} [Nm]

扭矩要求是基于应用要求的。
它必须是相同与或小于研究的齿轮箱的许用扭矩M_{n2}。

Required torque

M_{n2} [Nm]

Required torque is the one through the a ctual application requirement. It muse be equal toor less than the rated torque M_{n2}.

输出扭矩

M_{c2} [Nm]

输出扭矩值在选择齿轮箱时将使用到。
在考虑工作扭矩M_{n2}和使用系数fs后可按照下列公式计算出来：

Cal culated torque

M_{c2} [Nm]

Cal culated torque is the one used in selecting the gearbox. We can have the value as per the equation after considering both required torque M_{n2} and service factor fs

$$M_{c2}=M_{r2} \cdot fs<M_{n2} \quad (1)$$

三、转速 SPEED

输入转速

n1 [r/min]

该速度是和选择的电机有关的按照目录上的值是指工业中常见的单速或双速马达的速度。

假如具轮箱是通过外部驱动的，我们建议在1400rpm或以下的速度下操作齿轮箱，这样可以优化操作条件和使用寿命。更高的输入转速是允许的，但是这样的话，许用扭矩M_{n2}将受到影响。

Input speed

n1 [r/min]

The speed is the one used industry drien by either single or double speed motor. It is based on the selected motor.

If the gearbox is driven by outer motor,we suggest the speed under 1400rmp or even ower which will optimize operating conditions and lifetime, Though the higher input shaft is permitted, the rated torque M_{n2} will be affected.

输出转速

n2 [min^{-1}]

输出转速值n2是通过输入转速n1和齿轮数比i之间的关系，按照下列公式计算的：

Output speed

n2 [min^{-1}]

Output speed n2 is the one calulated by the following equation through the input speed n1 and the gear radion I.

$$n2=\frac{n1}{i} \qquad (2)$$

四、功率 POWER

额定功率

P_{n1}[KW]

在齿轮箱选择图表中，功率是指在使用系数fs=1的情况下，作用于输入轴上的，与输入转速有关。

Rated power

P_{n1}[KW]

The power is the one based on input shaft, it also relate to the speed under the situation of service factor fs=1.

五、使用系数 SERVICE FACTOR

该要素表示齿轮箱的使用系数，考虑到不可避免的误差及正常操作条件中的负荷不同，不论使用系数是怎样的值，齿轮箱的故障，都是有可能导致齿轮箱的损坏。假如你有疑问，请与我们技术中心联系。

Service factor is the one describing reducer service duty, considering unavoidable approximation and the difference of daily operating condition, involve fitting of parts, failure of the reducer all lead to the injure of the gearbox. If you have any question, please contact our technical service.

(A2)

每小时起动次数 Starts per hour	负荷 Duty	每天操作小时数 Daily operating hours			
		H≤0.5	0.5＜h≤2	2＜h≤10	10＜h≤24
Z＜10	均布荷载 Uniform loading	0.8	0.9	1.0	1.25
	中度瞬间荷载 mpderate shock loading	0.9	1.0	1.25	1.5
	重度瞬间荷载 heavy shock loading	1.0	1.25	1.5	1.75
Z≥10	均布荷载 Uniform loading	0.9	1.0	1.25	1.5
	中度瞬间荷载 mpderate shock loading	1.0	1.25	1.5	1.75
	重度瞬间荷载 heavy shock loading	1.25	1.5	1.75	2.0

上面列出的值在下列情况下必须乘以1.2

--换向操作

--瞬时冲击负荷

Values listed above must be multiplied by 1.2 in case of:

--Reversing operation

--Shock loading applying instantancously

六、选型 SELECTION

A.决定使用系数地f2

B.根据已知的M_{r2}算出输出扭矩，扭矩计算公式如下：

A.Determine the service factor f2

B. Calculate the output torquue M_{r2} according to the rated torque, the equation as:

$$M_{c2}=M_{r2}\cdot fs \qquad (3)$$

C.齿轮速比是按照客户要求输出转速n2和输入转速n1计算出来的：

C.Calculate ratio according to the output speed N2 and input speed N1:

$$i=\frac{n1}{n2} \qquad (4)$$

如果M_{c2}和i是已知的话，在选型表中根据合适的输入转速，找出与减速比i最接近的减速机型号，并同是满足许用扭值M_{n2}如下：

A.Determine the service factor f2

B. Calculate the output torquue M_{r2} according to the rated torque, the equation as:

$$M_{n2}\geqslant M_{c2} \qquad (5)$$

七、安装 INSTALLATION

以下安装指示必须遵守

A.确保齿轮箱正确的安装，以防止松动。假如必须在超负荷或有震动的场合使用，请安装液压偶合器，扭矩限制器等。

B. 在上漆之前，零件加工面和油封外表面必须有保护措施，以防止油漆干在橡胶上面破坏密封功能。

C.齿轮箱在投入使用之前，应确保和齿轮箱连接的设备应符相关的技术规定。

D.在启动机器之前，应确保油面符合齿轮箱的规定的装配位置，油的黏度应适合齿轮箱的使用的。详见图表A4.

E.对于室外安装。必须采用适当的措施来保护电机不受下雨或阳光暴晒的影响。

在装配之前，各安装面必须保持干净，并进行适当的处理以防止生锈。

A Make sure the correct installation of gear boxes to avoid vibrations, Install hydranlic coupling, clutched torque limiters, etc if used in shocked or over–loaded situation.

B Before the operation of gearbox, please make sure the connected equipments accord with the technical specification.

C The machine surface and the outer face of the oil seals must be protected before painting in order to keep the sealing faction.

D Before the starting of machine makes sure the oil level conforms to the machine level, the viciousness of oil is suitable for gearbox. Detail in chart A4.

E For ourdoor in stallation, we should take proper way to protect motors from ranfalls as well as sunshine.

All surfaces should keep clean before installation, and take proper method to prevent rusting.

安装齿轮箱
MOUNTING OF GEAR UNTT

拆卸齿轮箱
REMOVAL OF GEAR UNTT

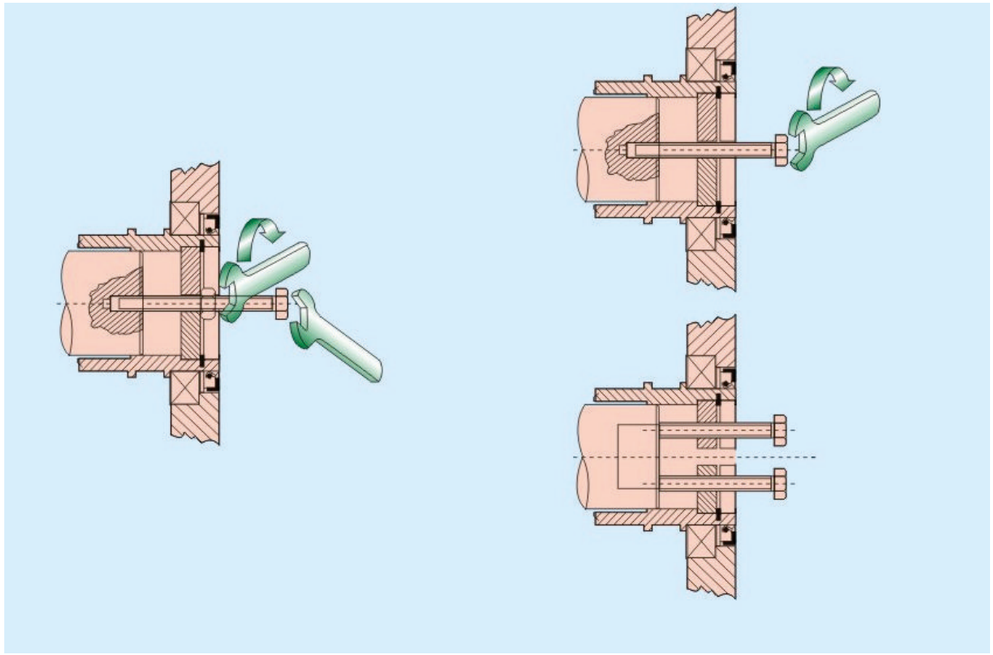

八、核查 VERIFCATION

径向负载

确保应用于输入或输出轴的径向负载是在许用范围内。

假如它们超出许用范围，在选用更大型号的减速机之前可先考虑设计特殊轴承结构。

如径向负荷不在轴伸的中间，应对其进行必要的修正，具体修正方法与我们技术中心联系。

轴向负荷

轴向符合必须在许用径向负荷的20%以内。

假如特别的高出，或者是轴向和径向负荷的综合作用，请与我们技术中心联系。

Radial loads

Make sure the radial loads both in input shaft and output shaft is with in the permitted range.

If it surpasses the permitted range, we can choose to select special designed bearing structure before switching to alarger gear unt.

It must be adjusted if the radial loads are not in the middle of the shaft please contact our technical service to gain more in formation.

Thrust loads

Thrust loads must be found with in 20% of the radial loads. If exrtemely high, or a combination of radial and thust loads, contact our technical service.

九、维护 MAIN TENANCE

在操作满300小时后，应该进行第一次换油，用合适的清洁剂冲齿轮机构。

不要把矿物油和合成油混合使用。

定期检查油的水平面，并且按照下列表格中的时间间隔换油。

After the 300 hour of operation, please change the oil, and flush the gear unit with suitable detergents.

Don’t mix the mineral oil and synthetic oil.

Please check the oil level in regular time, and change the oil according the following table.

(A3)

油温 Oil temperature [℃]	换油间隔（小时） Oil change interval [h]	
	矿物油 Mineral oil	合成油 Synthetic oil
＜65	6000	15000
65–80	3000	9000
80–95	1500	7500

十、油漆规格 PAINT SPECI FICATIONS

在齿轮箱上使用的油漆的规格必须从提供本机器的经销商或代理商处获得。

The paint specifications on gearbox must be obtained from the suppliers.

十一、供货条件 CONDITIONS OF SUPPLY

齿轮机构是按照以下供应的

A.按照定购时说明的安装和装配位置进行配置；

B.按照制造商的说明进行了测试；

C.在运输过程中，轴是用塑料封壳保护起来的；

D.提供了吊耳（当适用的时候）。

Gearboxes are supplied as follows:

A. Assembled the gearbox according to installing and mounting position specified when ordering.

B. Tested followiing the manufacturer specifications.

C. During the transportation, shaft is protected with plastic seals.

D. lifting lugs were supplied.

十二、储存 STORAGE

按照下列指示来确保产品的正确的储存。

A.不要在室外储存，不要在暴露在外受到天气影响和温度很高的地方储存。

B.请在产品和地面之间放置纸板，木头或其它材料。齿轮箱不能直接和地面接触。

According to the following in dications to make sure correct storage of products.

A. Don't store in somewhere exposed to be affected with whether and humidity.

B. Please put cardboard, woood or other material between the products and floor. The gearboxes aren't permitted to direct contact with floor.

如果需要储存很长时间，一些机器加工面例如法兰，轴和联轴器必须涂上适合的防锈的产油（MOBILARMA248或等同的产品）。

此外，齿轮箱的油位必须处于最高位并加满油。设备在重新投入使用之前，油量和类型都必须重新恢复。

For long-termstorage, the surfaces of parts such as shafts, coupling and flages must be coated with suitable oil to avoid rusting.

Another point is that gearbox must be placed the fill plug in the higest position and filled up with oil.(MOBILARMA 248 or Eqwivalent).

Before reusing the equipments, the oil quantity and type must be restored.

十三、型号标识说明 MODEL IDENTIFICATION DESCRIPTION

DXG 35 – D – ϕ35 – 19.5 – N – A – .....

其它要求
Other requirements

安装方位（型式）：A, B, C, D, VA, VB
Mounting orientation (type)：A, B, C, D, VA, VB

输出轴转动方向：L ---正反方向转动
Rotation direction L ---Rotation with positive and negative direction of the output shaft:
N ---带逆止器，面对入轴逆时针转动
N ---With backstop, it makes rotation in counterclockwise that facing to the input shaft
S --- 带逆止器，面对入轴顺时针转动
S ---With backstop, it makes rotation in clockwise that facing to the input shaft

齿轮速比：5，10~31
Gear ratio: 5，10~31

空心输出轴孔径：ϕ30， ϕ35，ϕ40， ϕ40， ϕ50， ϕ55，ϕ60， ϕ70，ϕ80， ϕ85， ϕ100， ϕ125， ϕ135
Dimensions of output hollow shaft: ϕ30， ϕ35，ϕ40， ϕ40， ϕ50， ϕ55，ϕ60， ϕ70， ϕ80， ϕ85， ϕ100， ϕ125， ϕ135

传动级数：D ---二级传动
Transmission stage: D---second-stage transmission

机座号后没有字母“D”为单级传动
It will be single-stage transmission if without letter “D” behind the frame

机座号：30，35，40，45，50，60，70，80，100，125
Frame No.:30，35，40，45，50，60，70，80，100，125

类型：DXG --- 悬挂式减速机
Type: DXG --- Hanging Gear Untis

齿轮箱其它选型要求 GEARBOX OPTIONS

LO

齿轮箱，除非客户有特殊的要求，否则出厂时都不加油。油量根据订货时指定的安装方式来订。

N

规定了逆时针方向旋转。

S

规定了顺时针方向旋转。

LO

Gearboxes are not filled up with oil unless customers have special requirenments.

Oi quantity is based on the mounting position specified when ordering.

N

Must rotate in counterclockwise

S

Must rotate in clockwise.

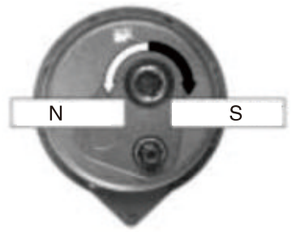

十四、润滑 LUBRICATION

`齿轮箱的内部件是浸油的和飞溅润滑的。

下面的图表可以参考安装位置和相应的油塞，假如适用的话，和对应的润滑剂量。

油量的值是否已经正确的装油，可通过油镜的中心或提供的量油计来衡量。

在某些情况下有差异，偶尔不合规格，假如和在下图表中列出的油量不一样的则需要注意。

The interprets gearboxes are oil-soak and splash lubricated.

The following charts in dicate the mounting position model and relevant oil plug. If applicable.Here is the corresponding lubricant quantity.

If the oil quantity is correct fillint: it can be meansured by the center of sight glass or supplied dipstick.

May be there are some misnomers and falling short of specification. Which are different from listed oil quantity must benoticed.

(A4)

负载类型 Type of duty	DXG 0℃-20℃		DXG 20℃-40℃	
	矿物油 Mineral oil ISO VG	合成油 Synthetic oil ISO VG	矿物油 Mineral oil ISO VG	合成油 Synthetic oil ISO VG
轻型 Tight duty	150	150	220	220
中型 Medium duty	220	150	320	220
重型 Heavy duty	320	220	460	320

油量(l) Oil quantity(l)

(A5)

DXG30	DXG35	DXG40	DXG45	DXG50	DXG60	DXG70	DXG80	DXG100	DXG125
0.50	1.2	2.1	3.1	8.0	7.5	11	17	20	27
	DXG35–D	DXG40–D	DXG45–D	DXG50–D	DXG60–D	DXG70–D	DXG80–D	DXG100–D	DXG125–D
	1.1	1.8	3.6	7.3	10	14	11	18	27

油量只和装配位置A相对应 Quantities are only relevant to mounting position A.

十五、安装方位 MOUNTING POSITIONS

	关键：	Key：
○	透气塞	Filling/breather plug
◒	油镜/油标	Level plug
●	油塞	Drain plug

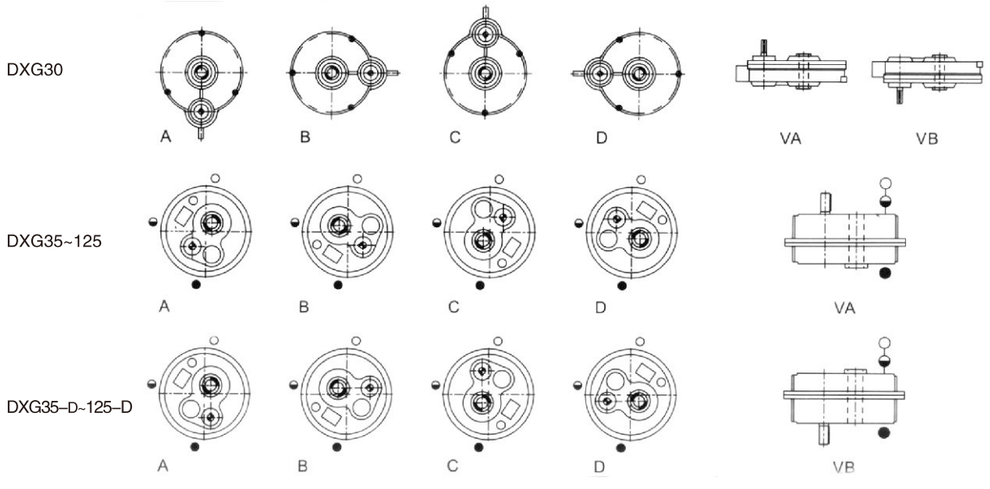

十六、悬挂负载 OVERHUNG LOADS

通过键把外部传动递到输入轴和输出轴,在同一根轴上的垂直方向生产负载。

由此产生的负载须与轴承和轴的性能相匹配。理论上，轴负载（R_{c1}）悬挂负载能力可在选型表中查出。

外部传动所产生的负载可近似地用以下公式算出。

Pass the external transmissions to input & output shafts by the key, loads act apeak on the same shaft.

Loading must be suitable with both the shaft and bearing capacity. Ideally, shaft loading(R_{c1}) must be equal or lower than overhung load(R_{n1}) for calculating. Overhung loads capacity can locate in the option chart. The loads generated from external tran smission can be apporximate calculated by the following equation.

The actual shaft loading and overhung loads should be satisfied the following equation.

$$R_{C1}[N]=\frac{2000 \cdot M_1[Nm] \cdot K_r}{d[mm]} \qquad (6)$$

在公式中 Where：

M1[Nm]=输出扭矩

d[mm]=轴的直径

Kr=1 链传动

Kr=1.25 齿轮传动

Kr=1.5–2.0 带传动

M1[Nm]=torque applied to shaft

d[mm]=pitch diameter of part keyed on to shaft

Kr=1 chain trasmission

Kr=1.25 gear transmission

Kr=1.5–2.0 belt transmission

实际轴负载和悬挂负载应满足以下公式:

A comparison of shaft loading with catalogue OHL ratings should verify the following condition:

$$R_{C1} \leqslant R_{n1} \qquad (7)$$

十七、 减速机选型表 RATING CHARTS

机型号 Model	i	n_1=1400r/min				n_1=900r/min				n_1=500r/min				Page
		n_2 r/min	Mn_2 Nm	Pn_1 kW	Rn_1 N	n_2 r/min	Mn_2 Nm	Pn_1 kW	Rn_1 N	n_2 r/min	Mn_2 Nm	Pn_1 kW	Rn_1 N	
DXG30	7.2	194	137	2.9	350	125	150	2.0	400	69	180	1.3	500	12
	10	140	137	2.1	350	90	150	1.4	400	50	180	1.0	500	
	12.64	111	137	1.6	350	71	150	1.1	400	40	180	0.8	500	

机型号 Model	i	n_1=1400r/min				n_1=900r/min				n_1=500r/min				Page
		n_2 r/min	Mn_2 Nm	Pn_1 kW	Rn_1 N	n_2 r/min	Mn_2 Nm	Pn_1 kW	Rn_1 N	n_2 r/min	Mn_2 Nm	Pn_1 kW	Rn_1 N	
DXG35	5	280	200	6.0	700	180	250	4.8	800	100	350	3.8	1000	13
DXG35–D	10	140	300	4.6	500	90	350	3.5	600	50	400	2.2	750	
	15	93	350	3.6	500	60	400	2.6	600	33	400	1.5	750	
	19.5	72	380	3.0	500	46	400	2.0	600	25.6	400	1.1	750	
	25	56	400	2.5	500	36	400	1.6	600	20.0	420	0.92	750	

机型号 Model	i	n_1=1400r/min				n_1=900r/min				n_1=500r/min				Page
		n_2 r/min	Mn_2 Nm	Pn_1 kW	Rn_1 N	n_2 r/min	Mn_2 Nm	Pn_1 kW	Rn_1 N	n_2 r/min	Mn_2 Nm	Pn_1 kW	Rn_1 N	
DXG40	5	280	480	14.4	1000	180	550	10.6	1200	100	700	7.5	1500	14
DXG40-D	10	140	600	9.2	850	90	750	7.4	950	50	800	4.4	1200	
	12.7	110	750	8.1	850	71	780	5.8	950	39	820	3.4	1200	
	15	93	780	7.7	850	60	800	5.3	950	33	850	3.1	1200	
	19.7	71	780	6.1	850	46	800	4.0	950	25.4	850	2.4	1200	
	25	56	800	4.9	850	36	850	3.4	950	20.0	900	2.0	1200	

机型号 Model	i	n_1=1400r/min				n_1=900r/min				n_1=500r/min				Page
		n_2 r/min	Mn_2 Nm	Pn_1 kW	Rn_1 N	n_2 r/min	Mn_2 Nm	Pn_1 kW	Rn_1 N	n_2 r/min	Mn_2 Nm	Pn_1 kW	Rn_1 N	
DXG45	5	280	850	26.0	1500	180	950	18.4	1700	100	1100	11.8	2150	15
DXG45-D	10	140	1000	15.4	1150	90	1200	11.9	1300	50	1300	7.2	1650	
	12.2	115	1100	13.9	1150	74	1200	9.7	1300	41	1300	5.9	1650	
	15	93	1200	12.3	1150	60	1250	8.3	1300	33	1300	4.8	1650	
	19.7	71	1250	9.8	1150	46	1300	6.5	1300	25.4	1350	3.8	1650	
	25	56	1300	8.0	1150	36	1350	5.4	1300	20.0	1400	3.1	1650	

机型号 Model	i	n_1=1400r/min				n_1=900r/min				n_1=500r/min				Page
		n_2 r/min	Mn_2 Nm	Pn_1 kW	Rn_1 N	n_2 r/min	Mn_2 Nm	Pn_1 kW	Rn_1 N	n_2 r/min	Mn_2 Nm	Pn_1 kW	Rn_1 N	
DXG50	5	280	1400	42	2250	180	1700	33	2500	100	1900	20	3100	16
DXG50-D	10	140	1750	27	1700	90	1900	18.8	1900	50	2000	11	2400	
	12.2	114	1800	23	1700	73	1900	15.7	1900	41	2000	9.2	2400	
	15	93	1900	19.5	1700	60	1950	12.9	1900	33	2100	7.7	2400	
	20.3	69	1950	14.8	1700	44	2000	9.8	1900	24.6	2100	5.7	2400	
	25	56	2000	12.3	1700	36	2100	8.3	1900	20.0	2300	5.1	2400	

机型号 Model	i	n_1=1400r/min				n_1=900r/min				n_1=500r/min				Page
		n_2 r/min	Mn_2 Nm	Pn_1 kW	Rn_1 N	n_2 r/min	Mn_2 Nm	Pn_1 kW	Rn_1 N	n_2 r/min	Mn_2 Nm	Pn_1 kW	Rn_1 N	
DXG60	5	280	1900	57	3200	180	2100	41	3600	100	2900	32	4500	17
DXG60-D	10	140	3100	48	2600	90	3200	32	2900	50	3300	18.2	3600	
	12.2	114	3100	39	2600	74	3200	26	2900	41	3300	14.9	3600	
	15	93	3200	33	2600	60	3300	22	2900	33	3550	13.0	3600	
	20.3	69	3250	25	2600	44	3400	16.6	2900	24.6	3550	9.6	3600	
	25.3	55	3300	20	2600	36	3500	13.9	2900	19.8	3600	7.9	3600	

机型号 Model	i	n_1=1400r/min				n_1=900r/min				n_1=500r/min				Page
		n_2 r/min	Mn_2 Nm	Pn_1 kW	Rn_1 N	n_2 r/min	Mn_2 Nm	Pn_1 kW	Rn_1 N	n_2 r/min	Mn_2 Nm	Pn_1 kW	Rn_1 N	
DXG70	5	280	2600	78	3700	180	3000	58	4200	100	4000	43	5200	18
DXG70-D	10	140	3800	59	3400	90	4400	44	3800	50	4500	25	4750	
	12.2	115	4000	51	3400	74	4400	36	3800	41	4500	20	4750	
	15	93	4400	45	3400	60	4500	30	3800	33	4900	18.0	4750	
	20.3	69	4500	34	3400	44	4600	22	3800	24.6	5000	13.6	4750	
	25	56	4600	28	3400	36	4900	19.4	3800	20.0	5100	11.2	4750	
	30.3	46	4600	23	3400	29.6	4900	16.0	3800	16.4	5100	9.2	4750	

机型号 Model	i	n_1=1400r/min				n_1=900r/min				n_1=500r/min				Page
		n_2 r/min	Mn_2 Nm	Pn_1 kW	Rn_1 N	n_2 r/min	Mn_2 Nm	Pn_1 kW	Rn_1 N	n_2 r/min	Mn_2 Nm	Pn_1 kW	Rn_1 N	
DXG80	5	280	3700	111	4550	180	4200	81	5100	100	5000	54	6400	19
DXG80-D	10	140	5500	85	4200	90	6100	60	4700	50	6300	35	5900	
	12.5	112	5500	68	4200	72	6100	48	4700	40	6300	28	5900	
	15	93	6100	63	4200	60	6300	42	4700	33	6600	24	5900	
	20.26	69	6100	46	4200	44	6300	31	4700	24.6	6600	17.9	5900	
	25	56	6300	39	4200	36	6600	26	4700	20.0	7000	15.4	5900	
	31.25	45	6300	31	4200	28.8	6600	21	4700	16.0	7000	12.3	5900	

机型号 Model	i	n_1=1400r/min				n_1=900r/min				n_1=500r/min				Page
		n_2 r/min	Mn_2 Nm	Pn_1 kW	Rn_1 N	n_2 r/min	Mn_2 Nm	Pn_1 kW	Rn_1 N	n_2 r/min	Mn_2 Nm	Pn_1 kW	Rn_1 N	
DXG100	5	280	5500	165	5500	180	6200	120	6200	100	7000	75	7900	20
DXG100-D	10	140	9000	139	5000	90	9500	94	5600	50	10000	55	6800	
	12.2	115	9000	113	5000	74	9500	77	5600	41	10000	45	6800	
	15	93	9500	98	5000	60	10000	66	5600	33	10500	39	6800	
	20.45	68	9500	72	5000	44	10000	49	5600	24.4	10500	28	6800	
	25	56	9800	60	5000	36	10500	42	5600	20.0	11000	24	6800	
	30.6	46	9800	49	5000	29.4	10500	34	5600	16.3	11000	20	6800	

机型号 Model	i	n_1=1400r/min				n_1=900r/min				n_1=500r/min				Page
		n_2 r/min	Mn_2 Nm	Pn_1 kW	Rn_1 N	n_2 r/min	Mn_2 Nm	Pn_1 kW	Rn_1 N	n_2 r/min	Mn_2 Nm	Pn_1 kW	Rn_1 N	
DXG125	5	280	7500	226	6500	180	8000	155	7300	100	10000	107	9200	21
DXG125-D	10	140	12500	193	5500	90	14000	139	6200	50	15000	83	7700	
	12.3	114	12500	157	5500	73	14000	113	6200	41	15000	67	7700	
	15	93	12500	128	5500	60	15000	99	6200	33	16000	59	7700	
	20.2	69	14000	106	5500	45	15000	73	6200	24.8	16000	43	7700	
	25	56	15000	92	5500	36	16000	63	6200	20.0	17000	37	7700	
	30.6	46	15000	75	5500	29.4	16000	51	6200	16.3	17000	30	7700	

十八、外形尺寸 DIMENSIONS

DXG30

重量 18kg

Weight 18kg

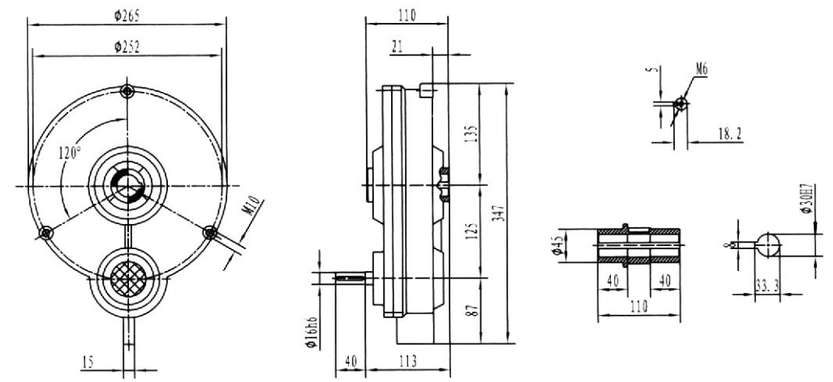

DXG35

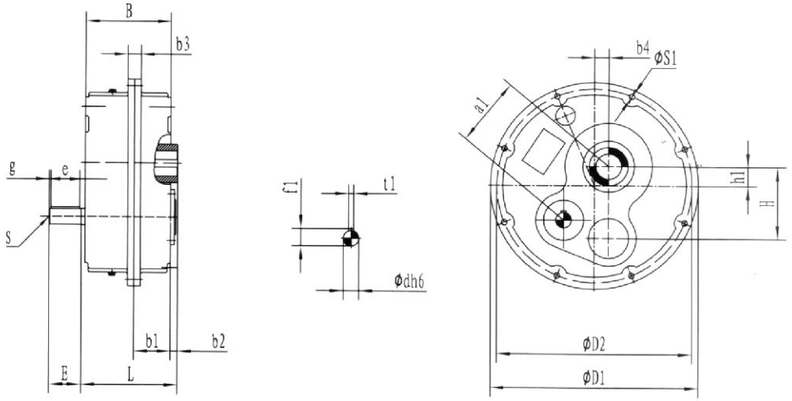

DXG35–D

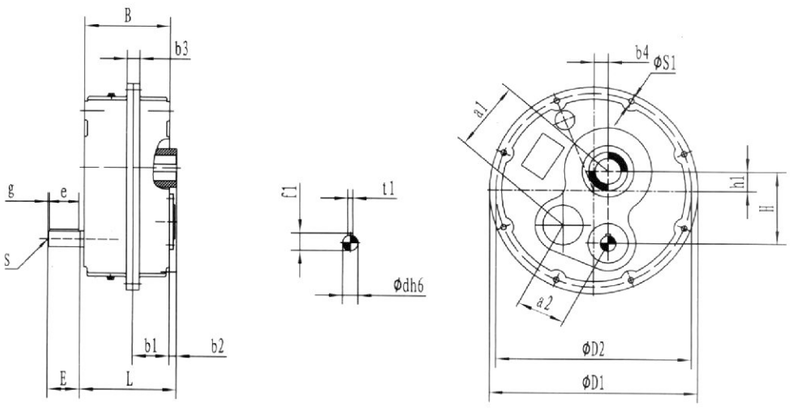

机型号 Model	外部尺寸 Outside dimensions																			重量 Weight (kg)
	a1	a2	H	h1	B	b1	b2	b3	b4	D1	D2	d	E	e	g	f1	t1	S	s1	L	
DXG35	79	59	83	23	111	44	12	20.5	21	256	240	19	40	36	2.5	21.5	6	M6	8.5	126	18
DXG35–D																					20

输出空心轴
output hollow shaft

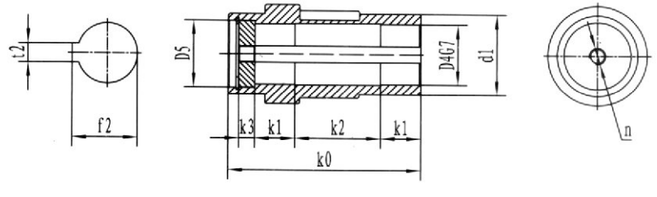

机型号 Model	输出空心轴的尺寸 Dimensions of output hollow shaft									
	d1	D4	D5	k0	k1	k2	k3	f2	t2	n
DXG35	50	35	42	124	30	46	10	38.3	10	M10

DXG40

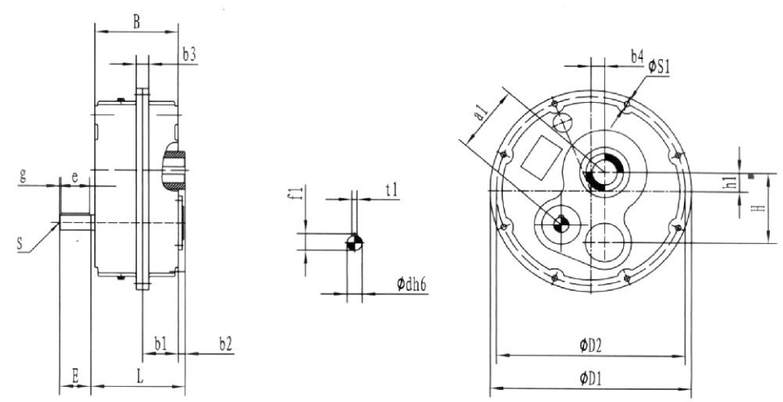

DXG40–D

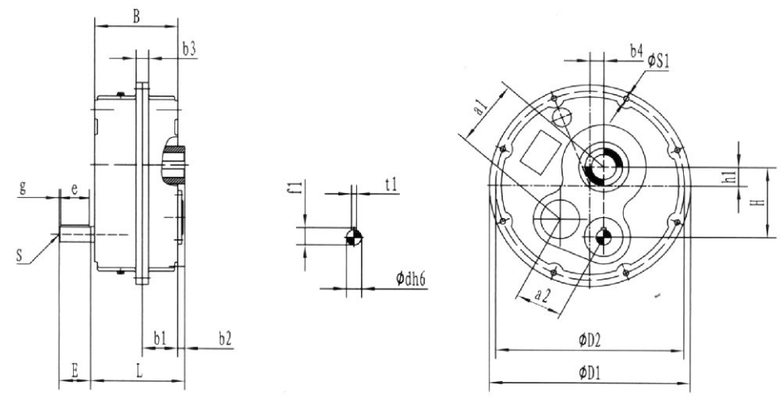

机型号 Model	外部尺寸 Outside dimensions																			重量 Weight (kg)
	a1	a2	H	h1	B	b1	b2	b3	b4	D1	D2	d	E	e	g	f1	t1	S	s1	L	
DXG40	109	75	112	30	132	57	11	20.5	22	330	310	24	50	45	2.5	27	8	M8	8.5	150	30
DXG40–D																					33

输出空心轴
output hollow shaft

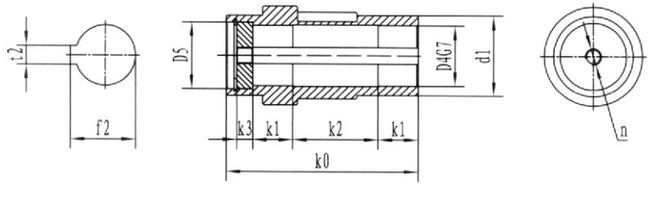

机型号 Model		输出空心轴的尺寸 Dimensions of output hollow shaft									
		d1	D4	D5	k0	k1	k2	k3	f2	t2	n
DXG40	Φ40	60	40	50	144	30	64	12	43.3	12	M12
	Φ45		45	50					48.8	14	

DXG45

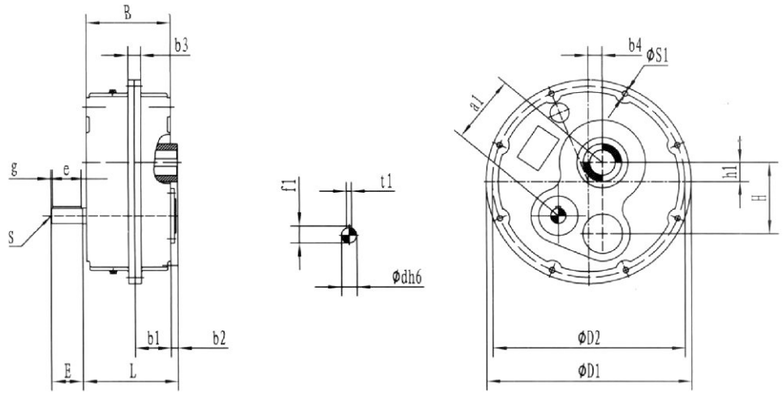

DXG45–D

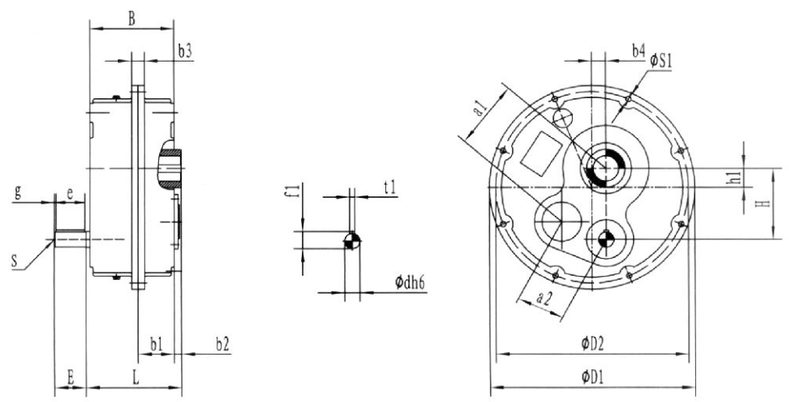

机型号 Model	外部尺寸 Outside dimensions																			重量 Weight (kg)
	a1	a2	H	h1	B	b1	b2	b3	b4	D1	D2	d	E	e	g	f1	t1	S	s1	L	
DXG45	120	91	123	34	147	60	15	20.5	33	364	344	28	60	50	5	31	8	M10	8.5	164	37
DXG45–D																					41

输出空心轴
output hollow shaft

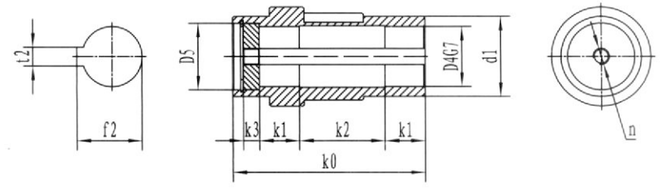

机型号 Model		输出空心轴的尺寸 Dimensions of output hollow shaft									
		d1	D4	D5	k0	k1	k2	k3	f2	t2	n
DXG45	Φ45	75	45	60	162	35	70	14	48.8	14	M16
	Φ50		50	60					53.8	14	
	Φ55		55	65					59.3	16	

DXG50

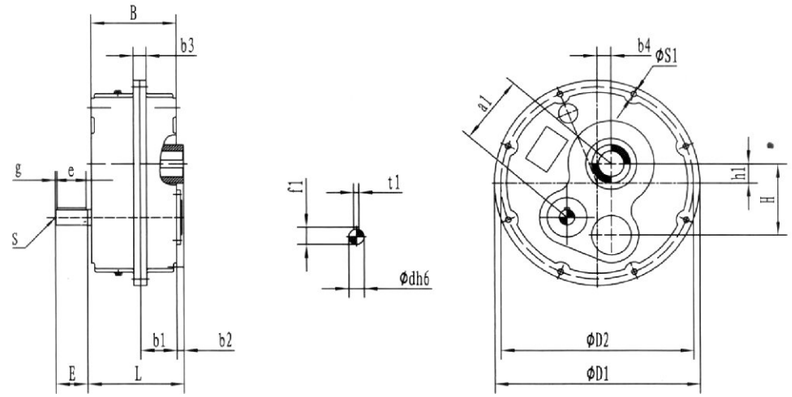

DXG50–D

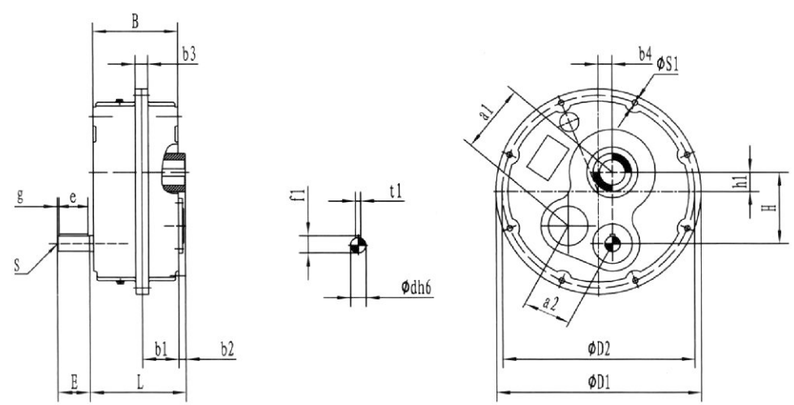

机型号 Model	外部尺寸 Outside dimensions																			重量 Weight (kg)
	a1	a2	H	h1	B	b1	b2	b3	b4	D1	D2	d	E	e	g	f1	t1	S	s1	L	
DXG50	140	117	143	40	165	68	15	24.5	46	435	410	38	80	70	5	41	10	M12	11	194	58
DXG50–D																					62

输出空心轴
output hollow shaft

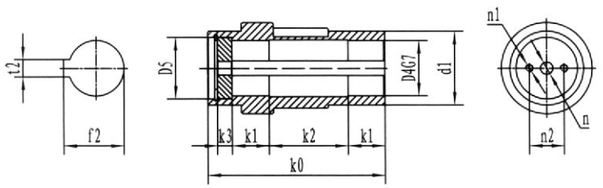

机型号 Model		输出空心轴的尺寸 Dimensions of output hollow shaft											
		d1	D4	D5	k0	k1	k2	k3	f2	t2	n	n1	n2
DXG50	Φ50	85	50	60	182	40	80	14	53.8	14	M16	–	–
	Φ55		55	65					59.3	16		–	–
	Φ60		60	70					64.4	18	17	M12	42

DXG60

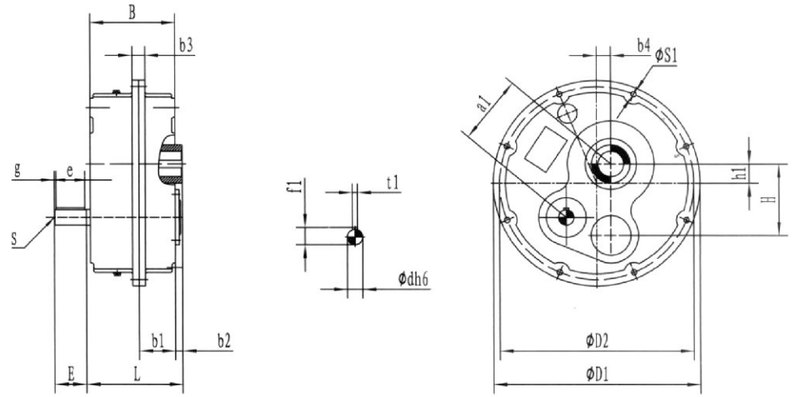

DXG60–D

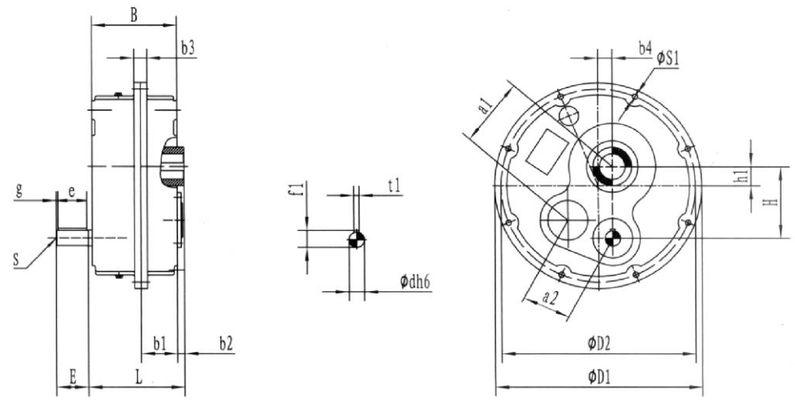

机型号 Model		外部尺寸 Outside dimensions																		重量 Weight (kg)
		a1	a2	H	h1	B	b1	b2	b3	b4	D1	D2	d	E	e	g	f1	t1	S	s1	L	
DXG60		162	130	174	47	182	73	16	28.5	48	500	468	42	110	100	5	45	12	M12	13	206	88
DXG60–D													38	80	70		41	10				102

输出空心轴
output hollow shaft

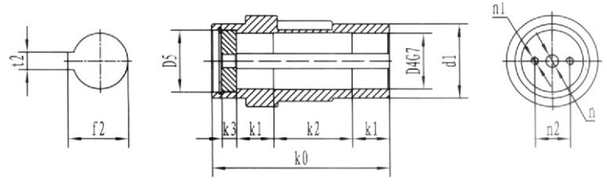

机型号 Model		输出空心轴的尺寸 Dimensions of output hollow shaft										
		d1	D4	D5	k0	k1	k2	k3	f2	t2	n	n1
DXG60	Φ60	100	60	70	199	45	85	14	64.4	18	M12	42
	Φ70		70	85				16	74.9	20	M16	50

DXG70

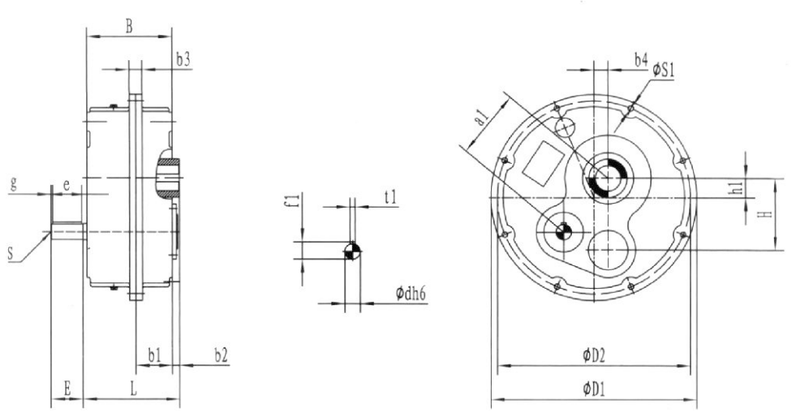

DXG70–D

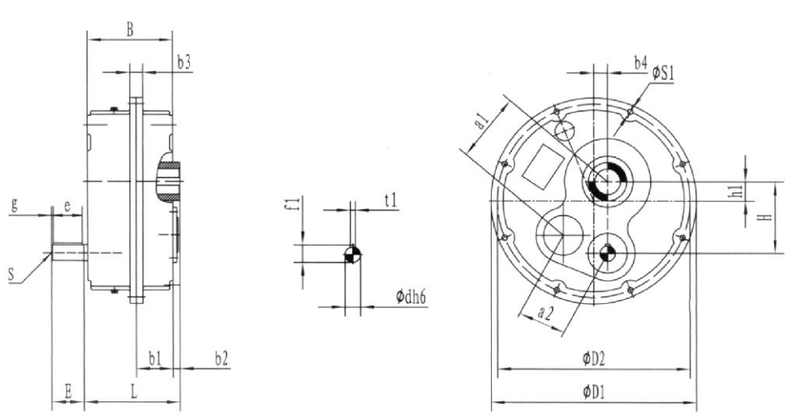

机型号 Model		外部尺寸 Outside dimensions																		重量 Weight (kg)
		a1	a2	H	h1	B	b1	b2	b3	b4	D1	D2	d	E	e	g	f1	t1	S	s1	L	
DXG70		182	139	188	52	205	84	18	28.5	53	550	520	48	110	100	5	51.5	14	M16	13	228	115
DXG70–D													42				45	12	M12			129

输出空心轴
output hollow shaft

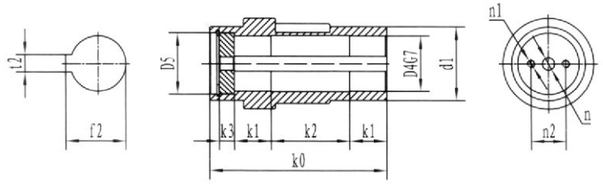

机型号 Model		输出空心轴的尺寸 Dimensions of output hollow shaft											
		d1	D4	D5	k0	k1	k2	k3	f2	t2	n	n1	n2
DXG70	Φ70	120	70	85	223	50	93	16	74.9	20	22	M16	50
	Φ85		85	100				18	90.4	22			65

DXG80

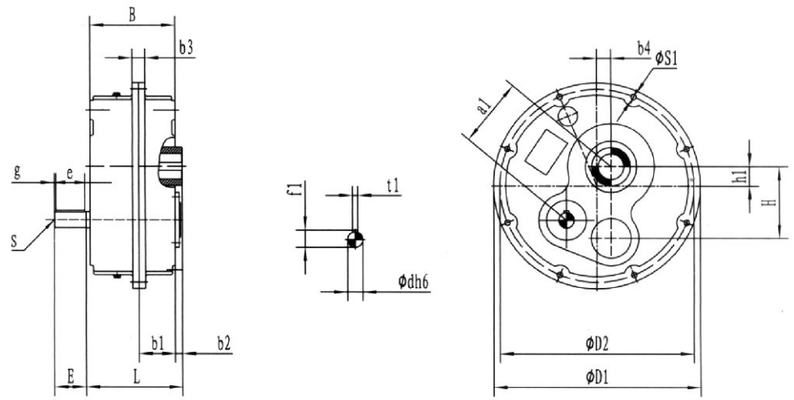

DXG80–D

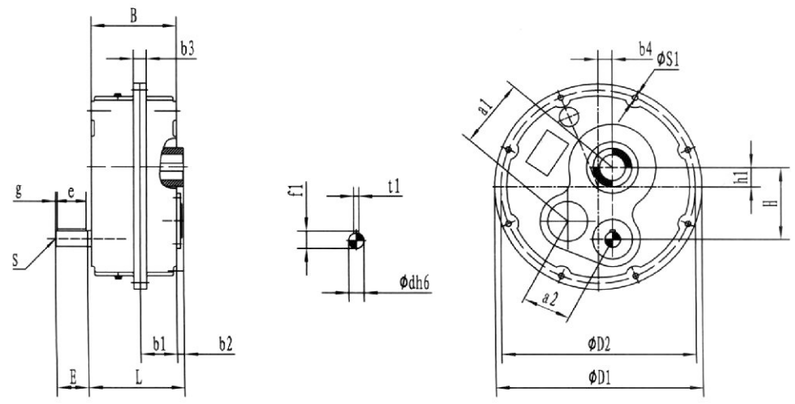

机型号 Model		外部尺寸 Outside dimensions																			重量 Weight (kg)
		a1	a2	H	h1	B	b1	b2	b3	b4	D1	D2	d	E	e	g	f1	t1	S	s1	L	
DXG80		202	152	207	58	228	94	21	32.5	58	597	570	48	110	100	5	51.5	14	M16	13	255	155
DXG80–D																						170

输出空心轴
output hollow shaft

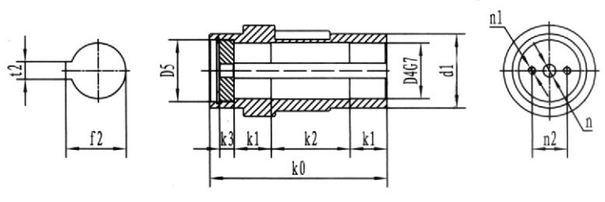

机型号 Model		输出空心轴的尺寸 Dimensions of output hollow shaft											
		d1	D4	D5	k0	k1	k2	k3	f2	t2	n	n1	n2
DXG80	Φ80	140	80	95	249	55	109	18	85.4	22	22	M16	60
	Φ100		100	120			107	20	106.4	28	26	M20	78

DXG100

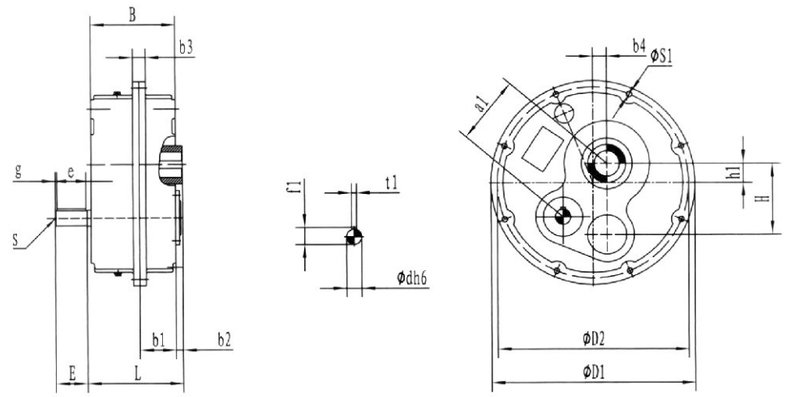

DXG100–D

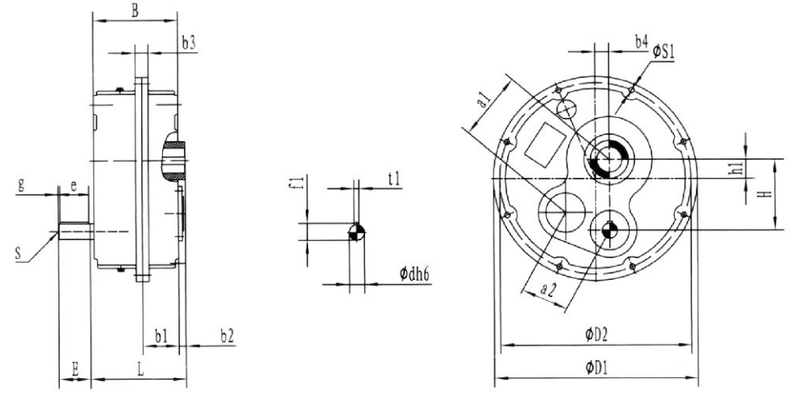

机型号 Model	外部尺寸 Outside dimensions																				重量 Weight (kg)
	a1	a2	H	h1	B	b1	b2	b3	b4	D1	D2	d	E	e	g	f1	t1	S	s1	L	
DXG100	239	180	255	70	257.5	108	30	40.5	60	710	675	55	110	100	5	59	16	M16	17	293.5	265
DXG100–D												48				51.5	14				285

输出空心轴
output hollow shaft

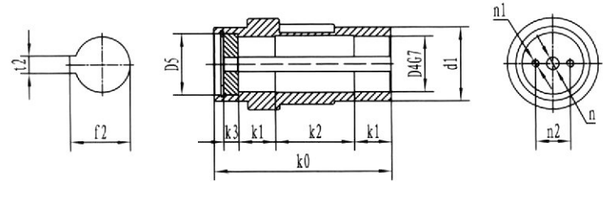

机型号 Model		输出空心轴的尺寸 Dimensions of output hollow shaft											
		d1	D4	D5	k0	k1	k2	k3	f2	t2	n	n1	n2
DXG100	Φ100	160	100	120	288.5	60	136.5	20	106.4	28	26	M20	78
	Φ125		125	145					132.4	32			100

DXG125

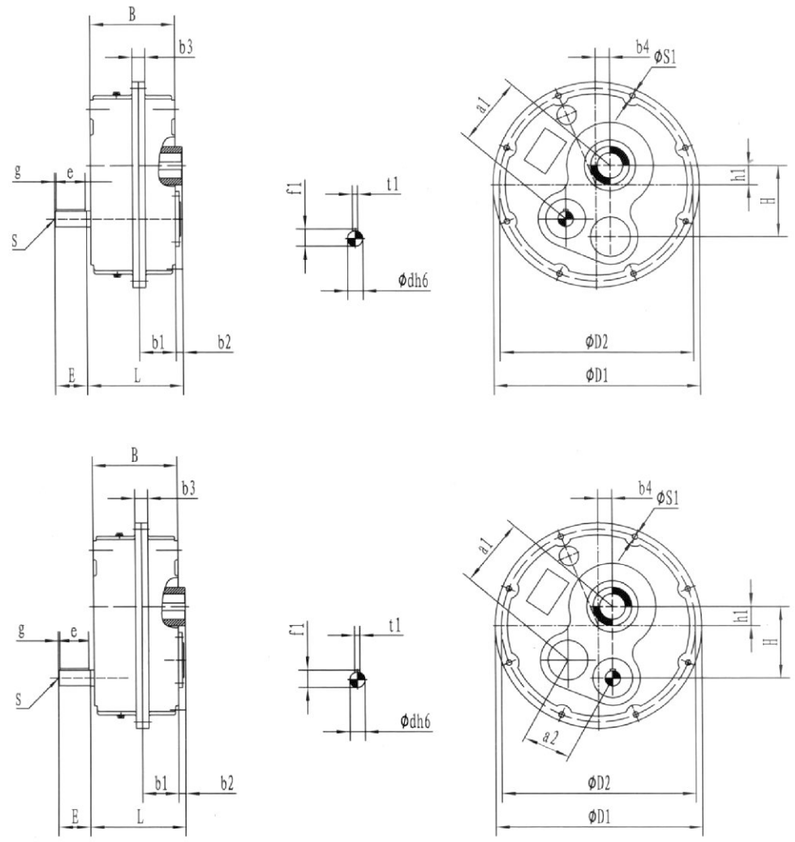

DXG125–D

机型号 Model		外部尺寸 Outside dimensions																		重量 Weight (kg)
		a1	a2	H	h1	B	b1	b2	b3	b4	D1	D2	d	E	e	g	f1	t1	S	s1	L	
DXG125		290	208	294	80	269	110	34	45.5	70	850	805	60	140	125	5	64	18	M16	17	310	350
DXG125–D													55	110	100		59	16				435

输出空心轴
output hollow shaft

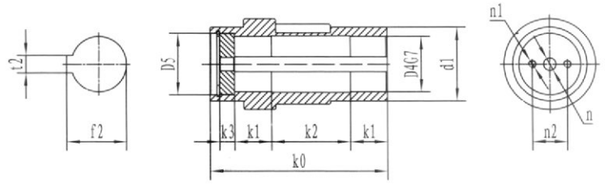

机型号 Model		输出空心轴的尺寸 Dimensions of output hollow shaft											
		d1	D4	D5	k0	k1	k2	k3	f2	t2	n	n1	n2
DXG125	Φ125	170	125	145	304	65	137	20	132.4	32	26	M20	100
	Φ135		135	150					143.4	36	32	M24	100

十九、 附件 ACCESSOIRES

拉臂 TENSION ARM

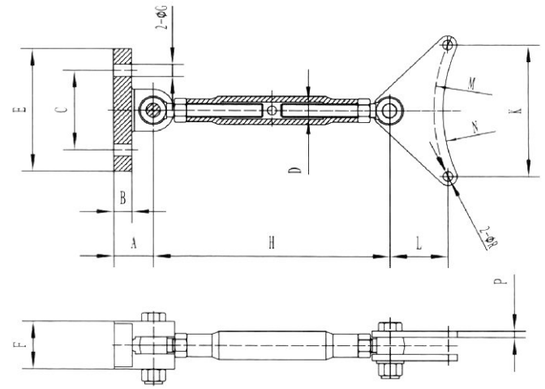

机型号 Model		Accessory dimensions														
		A	B	C	D	E	F	G	H min	H max	K	L	M	N	R	P
DXG35	Φ35	25	10	50	M10	75	30	8.5	200	300	91.8	45	120	111	8.5	4
DXG40	Φ40	35	16	70	M12	106	40	10.5	210	310	118.6	51	155	146	8.5	5
	Φ45															
DXG45	Φ45	35	16	70	M12	106	40	10.5	210	310	131.6	57	172	162	8.5	5
	Φ50															
	Φ55															
DXG50	Φ50	40	18	75	M14	115	48	12.5	240	360	156.9	70	205	195	10.5	5
	Φ55															
	Φ60															
DXG60	Φ60	40	18	75	M14	115	48	12.5	240	360	179.1	84	234	221	12.5	5
	Φ70															
DXG70	Φ70	45	20	85	M16	135	55	14.5	260	410	199	100	260	247	12.5	6
	Φ85															
DXG80	Φ80	45	20	85	M16	135	55	14.5	260	410	218	102	285	272	13	6
	Φ100															
DXG100	Φ100	65	30	150	M24	220	80	25	350	540	358.3	115	337.5	320.5	17	10
	Φ125															
DXG125	Φ125	65	30	150	M24	220	80	25	350	540	308	135	402.5	382	17	10
	Φ135															

张力臂 ARM ADJUSTMENT

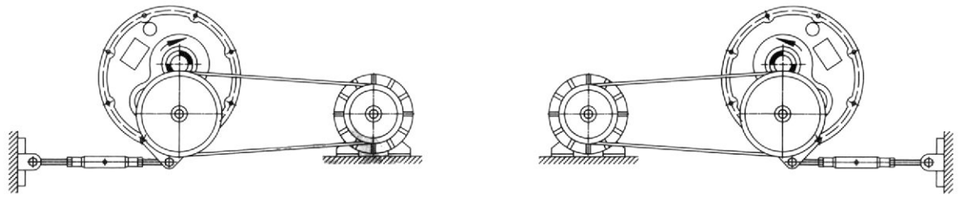

为了正确装配齿轮箱，张力臂需有张力拉伸。
In order to have a correct assembling of the gear boxes it is necessary that the tension arm is tensile stressed.

备忘录：

DXG系列悬挂式减速机
DXG Series Hanging Gear Untis

